SERVICE MANUAL

UP-370

MAY. 2009

INDEX

CASIO®

OVERVIEW

UP-370 is the successor model to UP-360. The 25-pin interface connector has been changed to a 9-pin connector.

CONTENTS

1. SPECIFICATIONS 1
   - 1-1. PRINTING SPECIFICATION 1
   - 1-2. PAPER SPECIFICATION 1
   - 1-3. INTERFACE SPECIFICATION 2

2. DISASSEMBLY 4

3. CIRCUITRY 7
   - 3-1. POWER SUPPLY CIRCUIT 7

4. MAINTENANCE & TROUBLESHOOTING 8
   - 4-1. INSTALLING OR REPLACING PAPER ROLL 8
   - 4-2. ADJUSTING THE PAPER NEAR END SENSOR 8
   - 4-3. PAPER JAM 9
   - 4-4. TROUBLESHOOTING 10
   - 4-5. SELF TEST 11

5. THE DIP SWITCHES 12
   - 5-1. DIP SWITCH 1 SETTING 12
   - 5-2. DIP SWITCH 2 SETTING 12
   - 5-3. FOR CHANGING DIP SWITCH SETTING 13

6. CIRCUIT DIAGRAMS 14

7. PARTS LIST 18

1. SPECIFICATIONS

1-1. PRINTING SPECIFICATION

Printing Method	Direct Line Thermal	
Dot Pitch	8 dot/mm	
Printing Speed	210 mm per second (max.)	
Printing Width	72 mm/576 dots	
Character Structure	8 x 16 (font B)	12 x 24 (font A)
Printing Columns	64 columns/line	44 columns/line
Character Size	1.00 x 2.00 (mm)	1.50 x 3.00 (mm)
Fonts	US-ASCII, Katakana, international characters	
Feed Speed	220 mm per second	
Interface	RS-232C (serial)	
Command	ESC/POS compliant	
Paper Width & Diameter	80 mm (W) x 80 mm Dia. Max.	
Thermal Head Life	100 km or more	
Cutting Method *1	Partial cut (one point left uncut) *1	
Operating Temperature	5 °C to 35 °C	
Storage Temperature	-20 °C to 60 °C	
Dimension	145 mm (W) x 193.2 mm (L) x 120.1 mm (H)	
Transfer Speed	38.4 kbps (max.) : RS-232C	
Supply Voltage In Standby	24 V DC / 100 mA	
Mean Current	Approx. 1.3 A *2	
Power Consumption	Approx. 40 W *2	
Weight	1.1 kg	
Barcode Alignment	○	
Near End Sensor	○	

*1: **CAUTION:**
Paper must be fed 3 mm after cutting to prevent paper jam.

*2: These values vary according to environmental temperature when printed font A (12 × 24) with a rolling pattern.

1-2. PAPER SPECIFICATION

Paper Width	79.5 ±0.5 mm (3.13 ±0.02")
Paper Roll Size	Roll diameter: Maximum 80 mm (3.15") Take-up paper roll width: 80 +0.5/-1.0 mm (3.15 +0.02/-0.04")
Specified Paper	Specified thermal roll paper: NTP080-80 [Paper: TF50KS-E2D Nippon Paper Industries Co., Ltd.] Packaged roll paper: [Paper: PD160R-N (Oji Paper Mfg. Co., Ltd.)] The following paper can be used instead of the paper above: Paper: HP220AB1 (Mitsubishi Paper Mills Ltd.)
Paper Roll Spool Diameter	Inside 12 mm (0.47") Outside 18 mm (0.71")

NOTE: The end of the paper roll must be free to come off the spool when finished. It must not be adhesively attached or attached in another semi-permanent manner.

1-3. INTERFACE SPECIFICATION

1-3-1. RS-232C SPECIFICATION

Data Transmission	Serial. EIA RS-232C compliant
Synchronization	Asynchronous
Handshaking	DTR/DSR or XON/XOFF control *
Signal Levels	MARK = -3 to -15 V: Logic "1"/OFF SPACE = +3 to +15 V: Logic "0"/ON
Baud Rate	4800, 9600, 19200, 38400 bps *
Data Word Length	8 bits, 7 bits *
Parity Settings	None, even, odd *
Stop Bits	1 or more
Connector (Printer Side)	Male DSUB-9 pin connector

* The data word length, baud rate, and parity depend on the DIP switch settings. (Refer to "5. THE DIP SWITCHES".)

1-3-2. RS-232C INTERFACE CONNECTION EXAMPLE

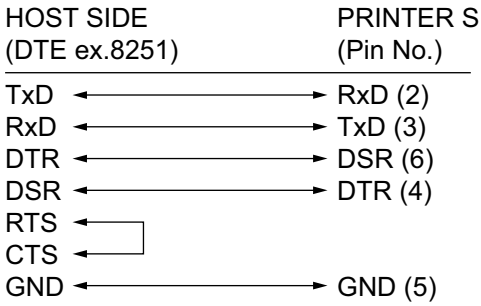

1-3-3. POWER SUPPLY CONNECTOR

The connector is connected the printer to an external power source.

Pin No.	Signal
1	+24 V
2	GND
3	NC
Shell	F.G

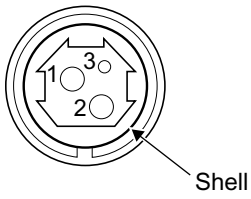

1-3-4. DRAWER KICK-OUT CONNECTOR

The pulse specified by ESC p or DLE DC4 is output to this connector. The HOST can confirm the status of the input signal by using the DLE EOT, GS a, or GS r commands.

Pin No.	I/O	Description
1	-	Frame ground
2	Output	Drawer kick-out drive signal 1
3	Input	Drawer open/close signal
4	Output	+24 V
5	Output	Drawer kick-out signal 2 *
6	-	Signal ground

* Two drawers can be used with a Y-cable that meets the following specifications.

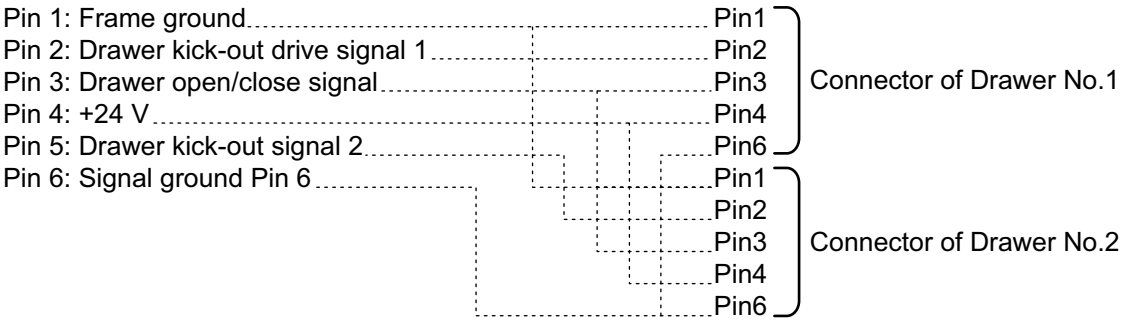

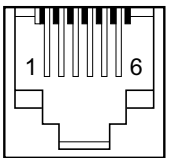

CONNECTOR MODEL:
Printer side: MOLEX52065-6615 or equivalent
Used side: 6-position 6-contact (RJ12 telephone jack)

2. DISASSEMBLY

1. Remove four screws at the bottom of the printer unit.

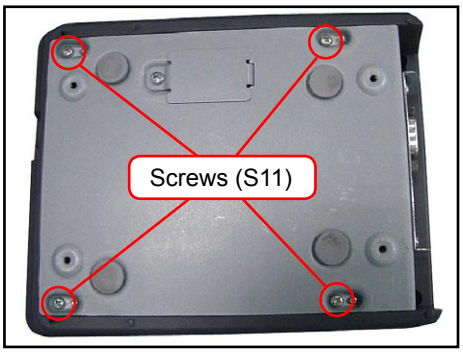

2. Remove five connectors (CN1, CN2, CN3, CN5, CN6) and the FFC (J1).

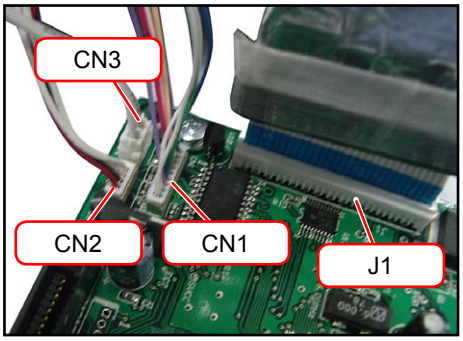

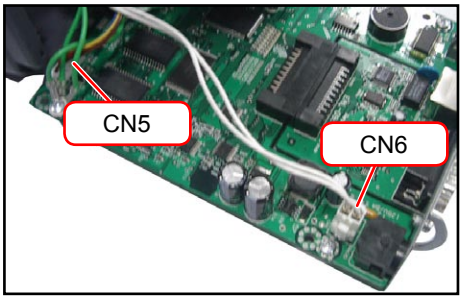

3. Remove three screws and then remove the main PCB.

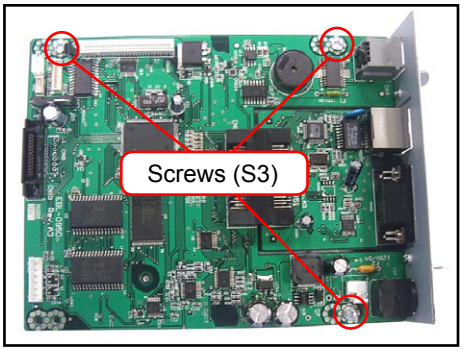

4. Remove two screws.
5. Remove the upper cover while the printer cover is open.

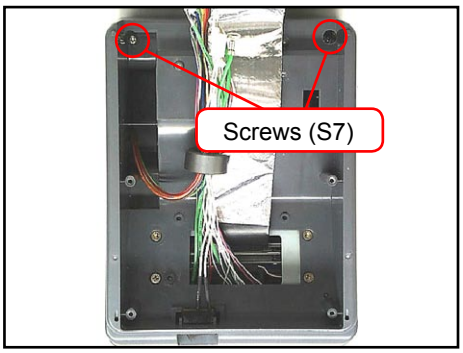

Precaution when assembling:

Let the connector through the hole.

Precaution when assembling:

Slide the lever of the cover to “close” and then fit the upper cover into the printer.

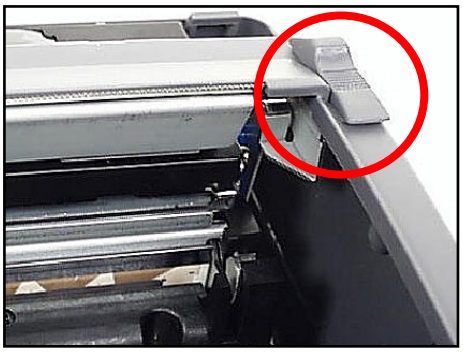

6. Remove the screw and then the printer cover.

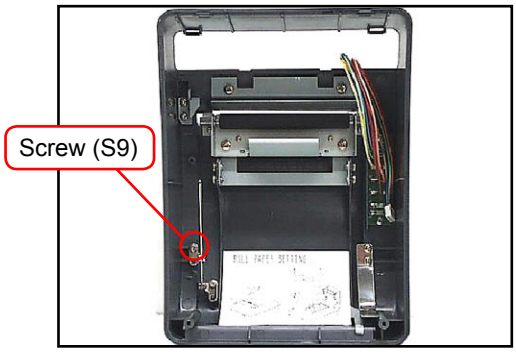

7. Remove two screws and then the control panel.

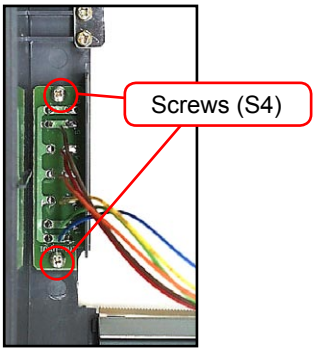

8. Remove the two screws and then the paper guide and the cutter.

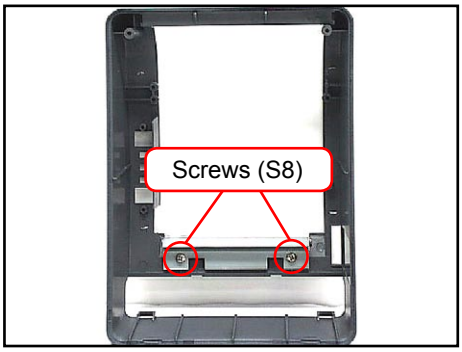

9. Remove the power switch.

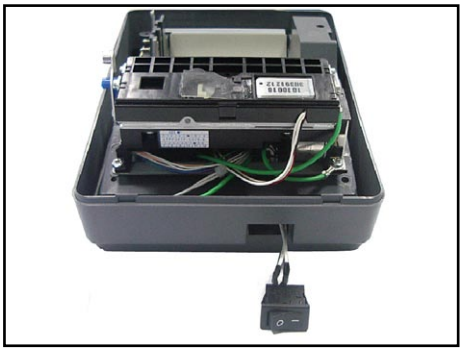

10. Remove the four screws and then the printer unit.

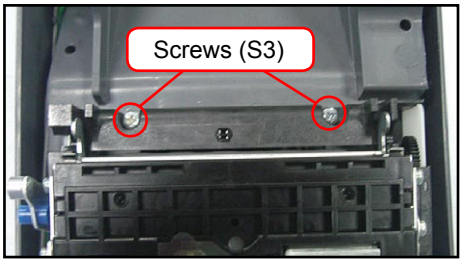

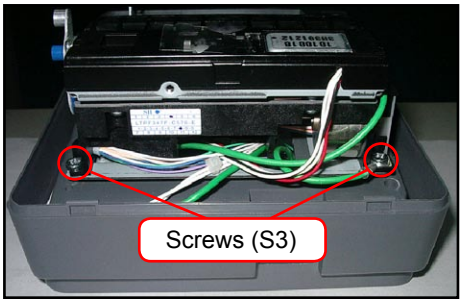

11. Loosen the two screws and then remove the end sensor unit.

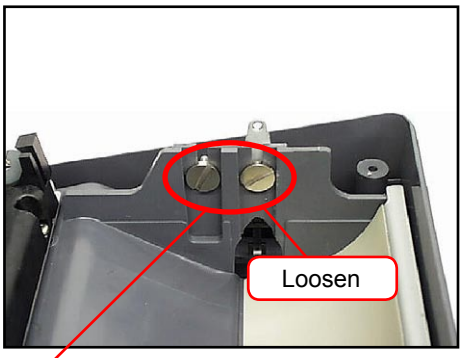

Precaution when assembling

Fix the end sensor unit at the lowest of the groove.

Precaution when assembling:

Be sure to arrange the cables as shown below.

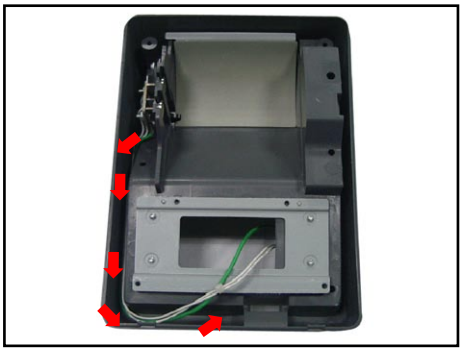

3. CIRCUITRY

3-1. POWER SUPPLY CIRCUIT

The power supply source is a DC 24 V.

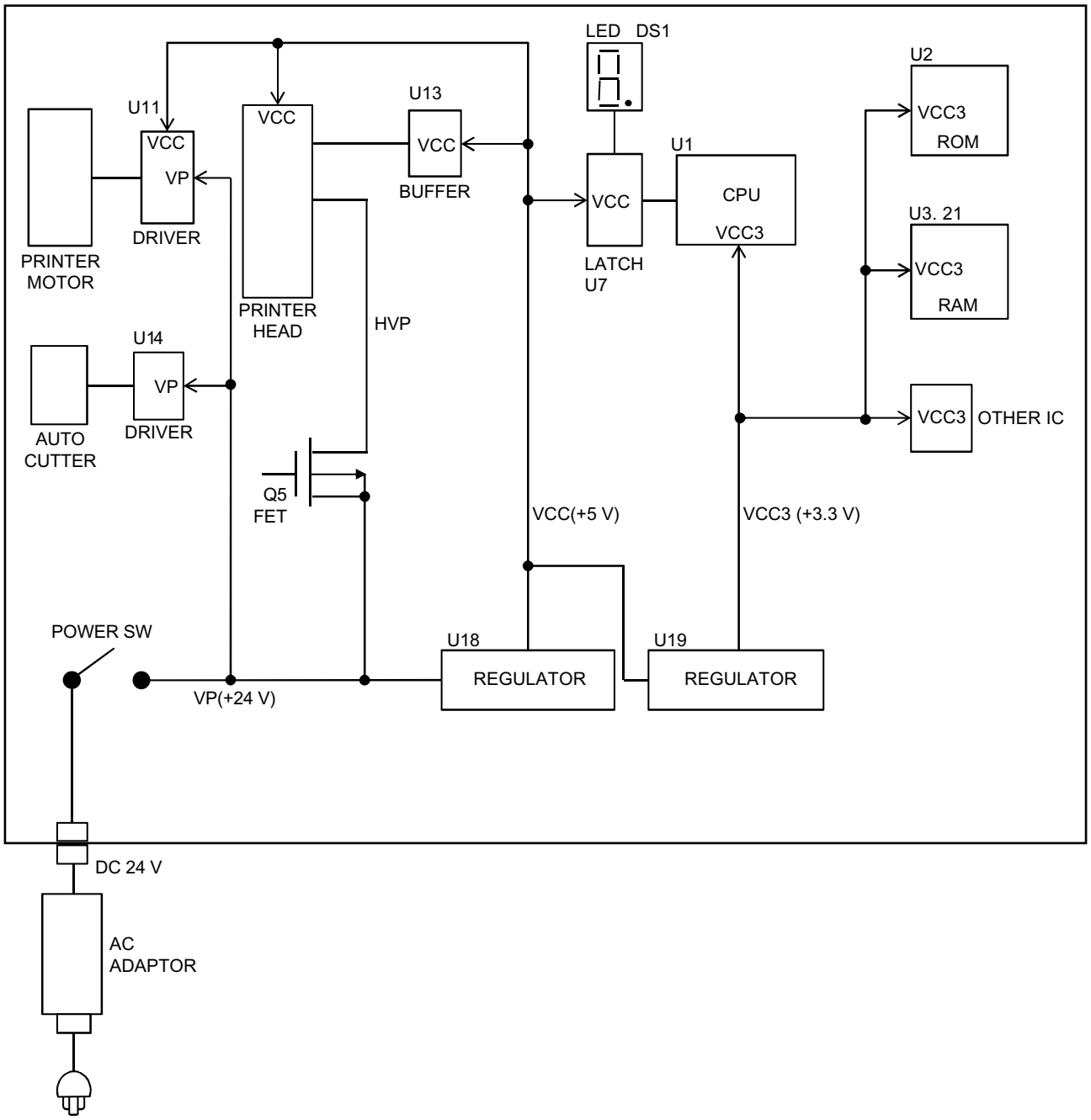

4. MAINTENANCE & TROUBLESHOOTING

4-1. INSTALLING OR REPLACING PAPER ROLL

CAUTION:
Make sure that paper rolls meets printer's specification. Do not use paper rolls that have one end glued to the core. This causes excessive load on the paper feed.

1. Make sure that the printer is not printing or receiving data, and open the printer cover by sliding the cover open knob. Unroll 10 to 15 cm of the paper as shown.

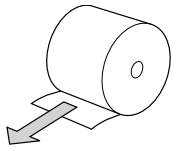

2. Insert the paper roll as shown.

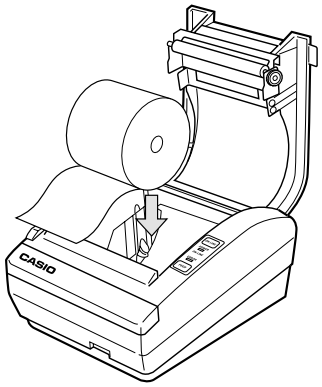

3. Pull out 10 to 15 cm of paper and close the printer cover as shown. Tear off the excess paper on the cutter edge.

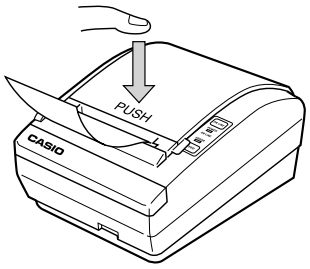

4-2. ADJUSTING THE PAPER NEAR END SENSOR

A sensor detects when the paper roll is running out. Due to variation in the width of paper roll cores, it is difficult to measure the exact length of the paper left on the roll when the detector is triggered. The factory setting is based on a paper roll core with an outside diameter of 18 mm and an inside diameter of 12 mm. If you use a paper roll with different widths, adjust the setting as described below.

1. Open the printer cover and remove the paper roll.
2. Loosen the adjusting screw and move the tab to fit the core of the paper roll.
3. Tighten the adjusting screw.
4. Replace the paper roll and close the printer cover.

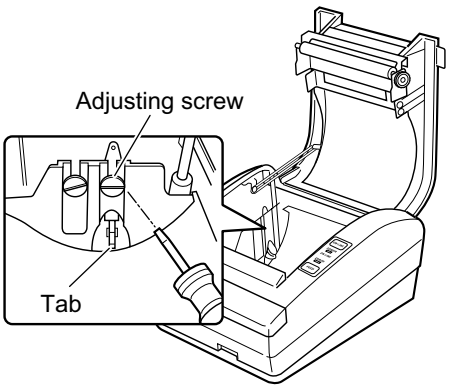

4-3. PAPER JAM

CAUTION:
Do not touch the printer head because they are very hot after continuous printing. Do not attempt to clear a paper jam until the printer cools down.

1. Turn the printer off and slide the cover open knob.
2. Remove the jammed paper and replace the paper roll.

If the printer cover can't be opened after a paper jam, follow the procedure below.

1. Push down and slide to remove the Automatic Paper Cutter Cover.

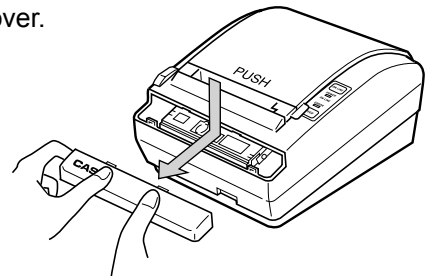

2. Pull up the clear film, and slowly turn the screw inside counter-clockwise until the cutter edge reaches home position.

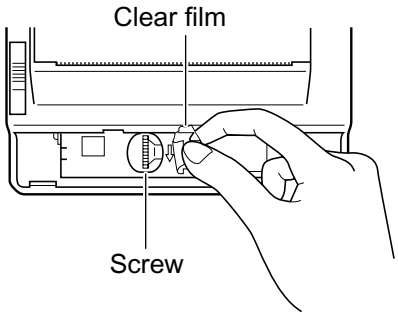

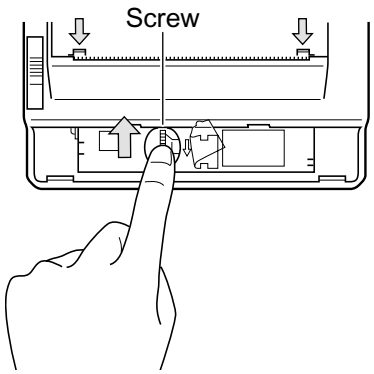

3. Push down and slide to close the Automatic Paper Cutter Cover.
4. Now, the printer cover should open easily.
   Remove the paper jam and replace the paper roll.

4-4. TROUBLESHOOTING

Error Contents	Causes / Points to Check	Solutions
Can't turn the printer ON.	Is the power switch turned ON?	Turn the power switch ON.
	Is the connector on the power adapter properly connected?	Connect the connector firmly.
	Does the LED on the adapter light up when connected to the wall?	If the LED does not light up, check to see if the power cable is connected properly. If the power cable is connected properly, replace the AC adaptor or the main PCB.
The ON LINE indicator doesn't light up.	Is the ERROR Indicator ON?	If it is, see "the ERROR Indicator is ON".
	Press the ON LINE button	If the ON LINE indicator turns on, it's normal.
The ERROR Indicator is ON.	Check if the printer is out of paper.	If paper is out, replace with a new roll.
	The cover doesn't open even if you slide the cover open knob.	The Automatic Paper Cutter may be locked, See "4.3 PAPER JAM".
	The printer cover doesn't close completely.	Open the cover by sliding the cover open knob, and close it again by pushing at center of the cover.
The ERROR indicator doesn't light up while paper is exhausted. (The printer cover is close.)	The ON LINE indicator lights up by using the ON LINE button.	Check the sensor and the main PCB, and replace them if necessary.
The ERROR indicator doesn’t light up while the printer cover is opened.	The ON LINE indicator is not ON	Check the sensor and the main PCB, and replace them if necessary.
Printing cannot be done by the commands from the HOST or printing garbled.	Check print capability by running the self test.	If the printing cannot be performed, check the printer head and/or the main PCB and replace them if necessary.
	Is the connector of interface firmly connected with screws?	Set the connector firmly and tighten the screws.
	Check the setting of DIP switch.	Refer to "5. THE DIP SWITCHES". Set the switches correctly, then power cycle the printer.
The drawer kick doesn't work.	Is the drawer kick connected properly?	Re-plug in the cable. You should hear or feel a click if the proper connection is made.
	Is Y-cable connected in reverse order?	Check the Y-cable and verify it is connected in the correct order.
The ERROR indicator and ON LINE indicator flash on and off alternately.	Check the setting of DIP Switch.	Refer to "5. THE DIP SWITCHES". Turn the printer off, make any necessary changes, then turn the printer on.

4-5. SELF TEST

Use the self test to check that your printer is operating properly. It checks the control circuits, printer mechanisms, print quality, and displays the firmware version and DIP switch settings.

1. Make sure that the printer cover is closed properly and turn the power off.
2. While holding down the FEED button, turn the printer on and continue holding down the FEED button until the self test starts.
3. The self test will end automatically and detach the self test print out.

Self Print (Japanese CG)

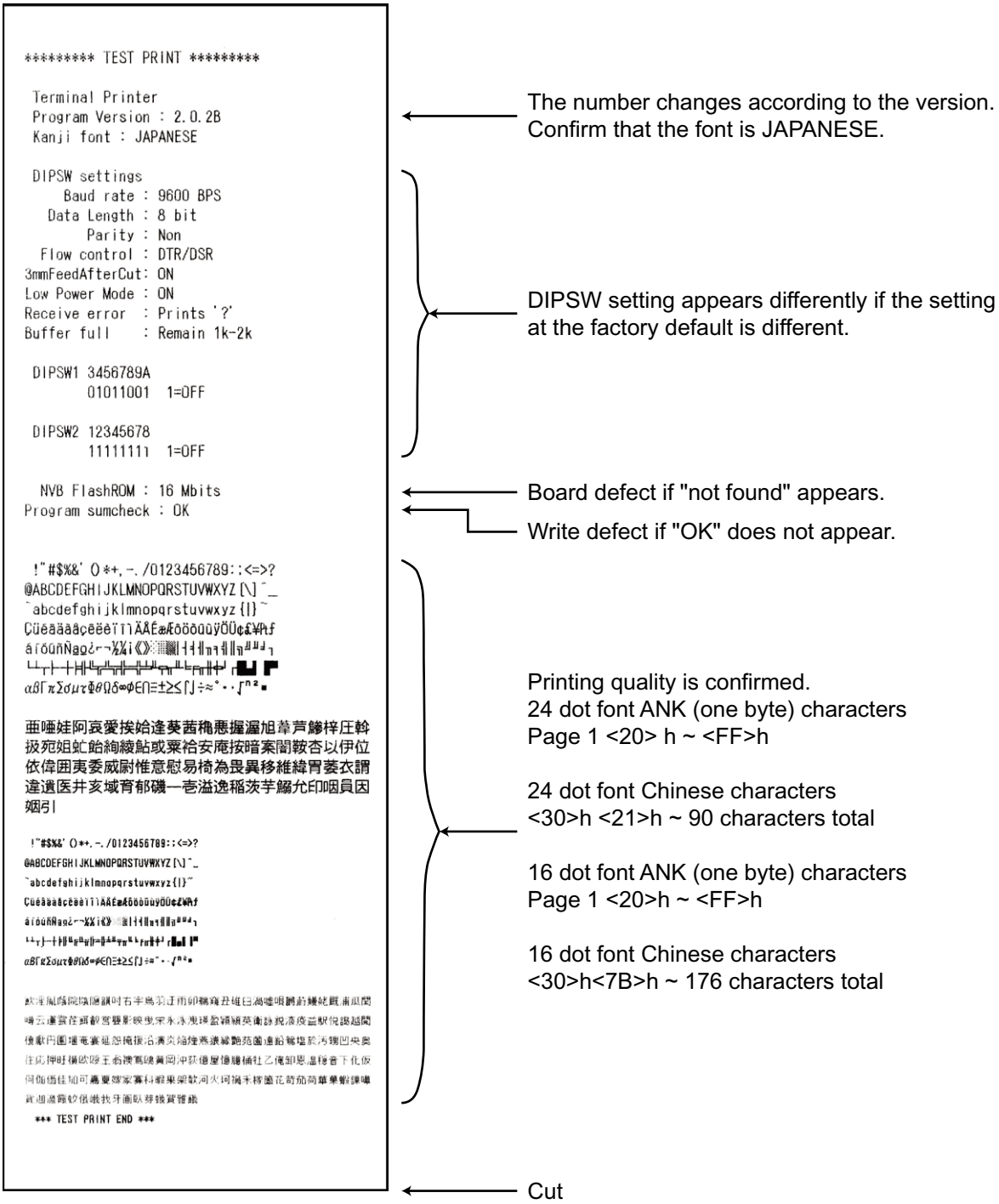

The number changes according to the version. Confirm that the font is JAPANESE.

DIPSW setting appears differently if the setting at the factory default is different.

Board defect if "not found" appears.

Write defect if "OK" does not appear.

Printing quality is confirmed.
24 dot font ANK (one byte) characters
Page 1 <20> h ~ <FF>h

24 dot font Chinese characters
<30>h <21>h ~ 90 characters total

16 dot font ANK (one byte) characters
Page 1 <20>h ~ <FF>h

16 dot font Chinese characters
<30>h<7B>h ~ 176 characters total

Cut

5. THE DIP SWITCHES

5-1. DIP SWITCH 1 SETTING

= Default setting

No.	Contents	Status		Status	
1	Reset By Dtr Signals	Off	Invalid	On	Valid
2	Reserved	Off	Fixed to Off		
3	Protocol	Off	XON/XOFF	On	DTR/DSR
4	Baud Rate	Refer to the table "Baud rate" below.			
5					
6	Parity	Refer to the table "Parity" below.			
7					
8	Busy status	Off	Buffer full	On	Buffer full + OFFLINE
9	Low power consumption mode *	Off	Off	On	On
10	3 mm feed after auto cut	Off	Valid	On	Invalid

* Printing speed is fixed to 150 mm/sec. (max.) and power consumption to approx. 8 A (max.) (instantaneous value).

Table "Baud rate"

No.	4800 bps	9600 bps	19200 bps	38400 bps
4	off	off	on	on
5	off	on	off	on

Table "Parity"

No.	NON	EVEN	ODD	NON
6	off	off	on	on
7	off	on	off	on

5-2. DIP SWITCH 2 SETTING

= Default setting

No.	Contents	Status		Status	
1	Data reception error	Off	Print "?"	On	Ignore
2	Bit length	Off	8 bit	On	7 bit
3	Reception buffer full	Off	*1	On	*2
4	Undefined	Off	/	On	/
5	Undefined	Off	/	On	/
6	Undefined	Off	/	On	/
7	Undefined	Off	/	On	/
8	Undefined	Off	/	On	/

*1: Until the room of the reception buffer increases from 1 Kbyte to 2 Kbytes.
*2: Until the non-processing data in the reception buffer decreases from 31 bytes to 21 bytes.

5-3. FOR CHANGING DIP SWITCH SETTING

1. Make sure that Power of the printer is turned off.
2. Loose the screw and remove the metal plate at the bottom of the printer.
3. Change the status of DIP switch by using something with a point.
4. Replace the metal cover and fasten the screw.

CAUTION:
The new status becomes effective when the printer power is turned on.

DIP Switch Position

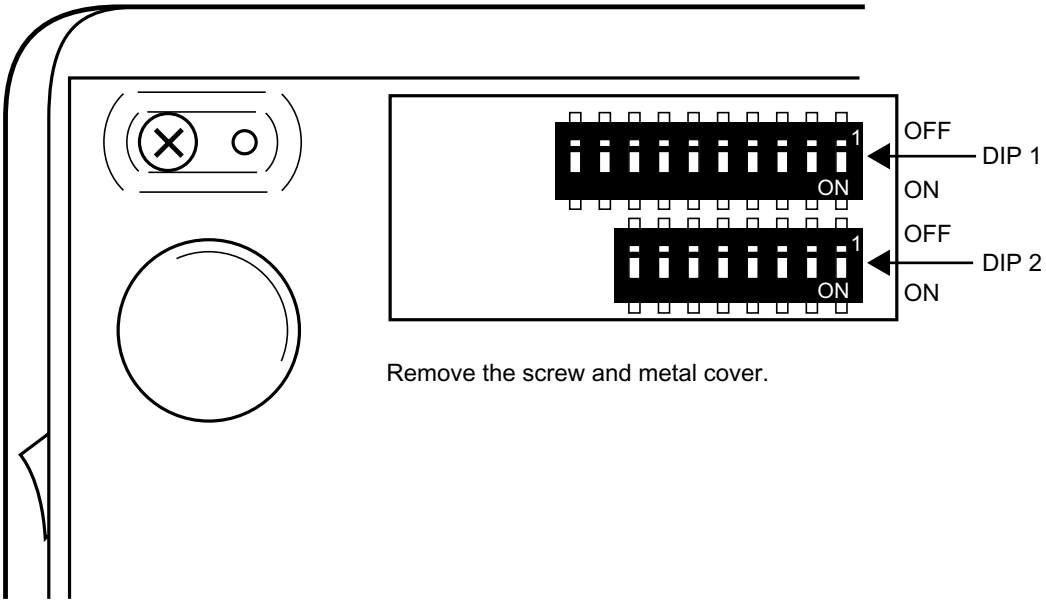

Remove the screw and metal cover.

6. CIRCUIT DIAGRAMS

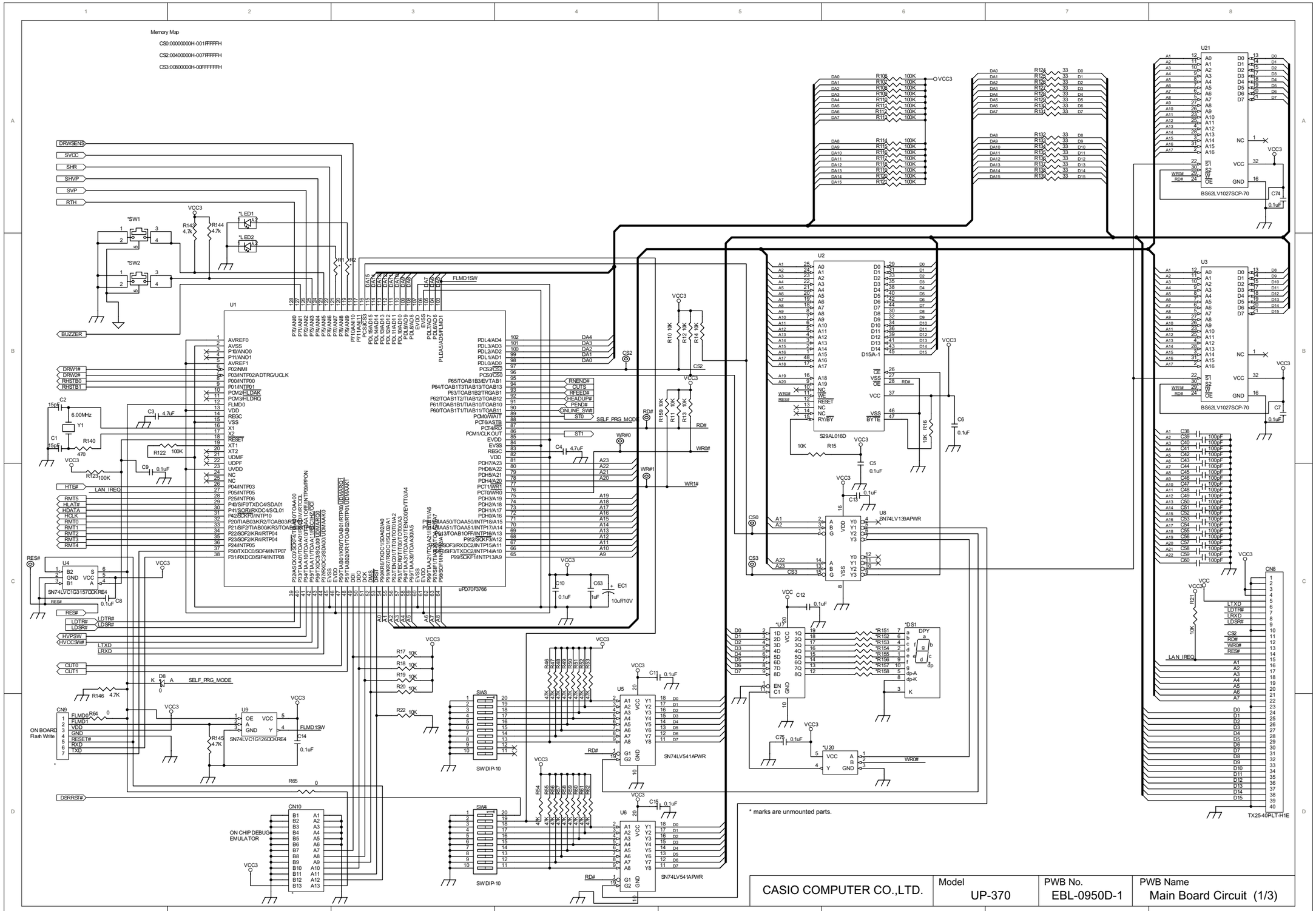

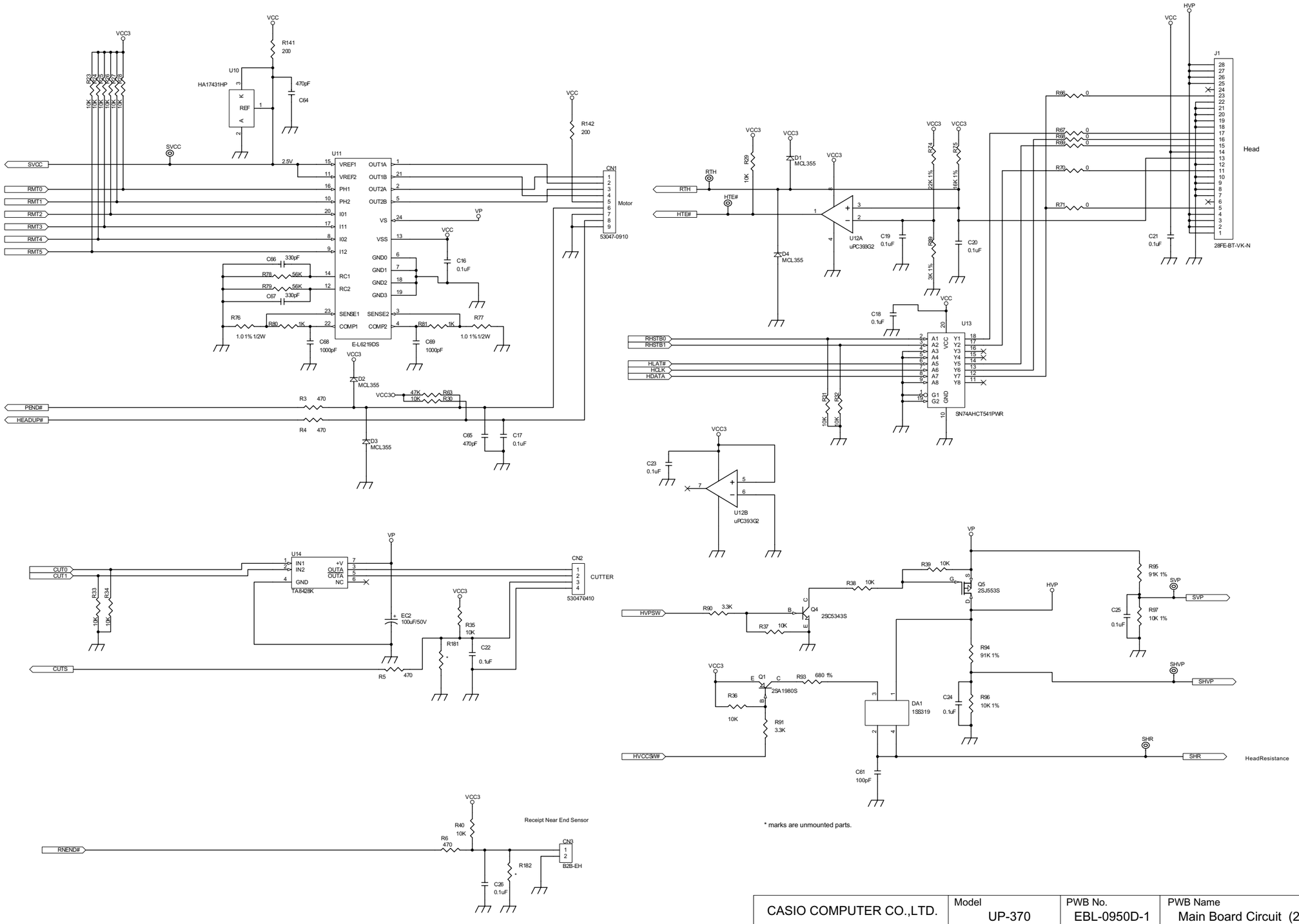

CASIO COMPUTER CO.,LTD.	Model	PWB No.	PWB Name
	UP-370	EBL-0950D-1	Main Board Circuit (2/3)

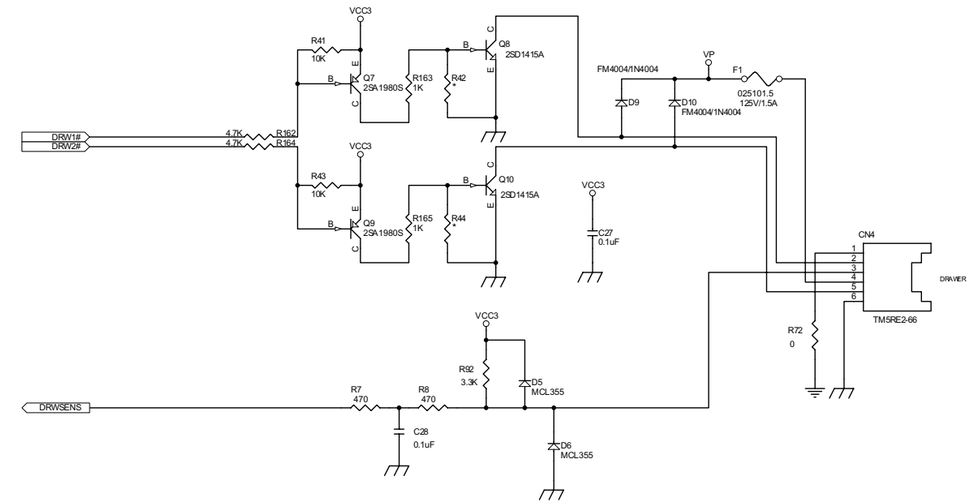

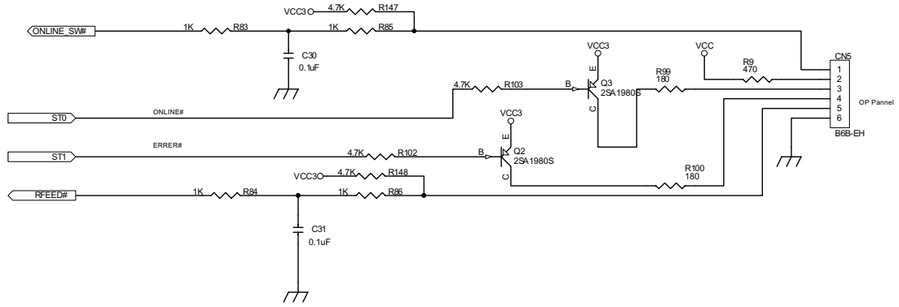

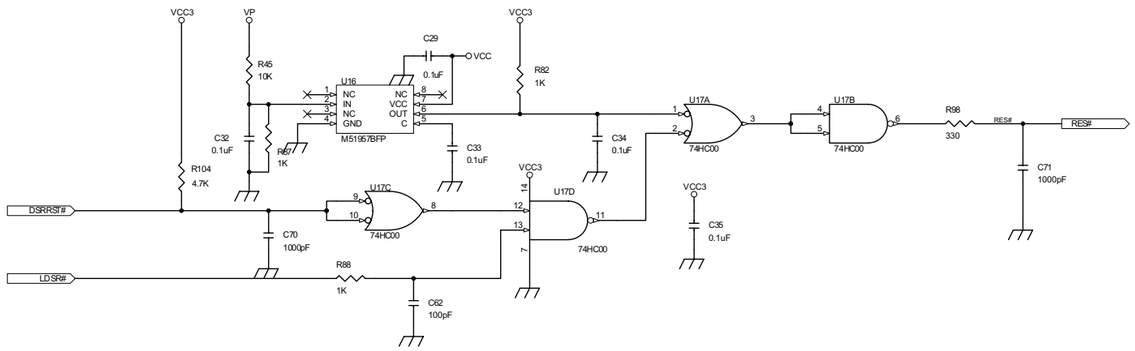

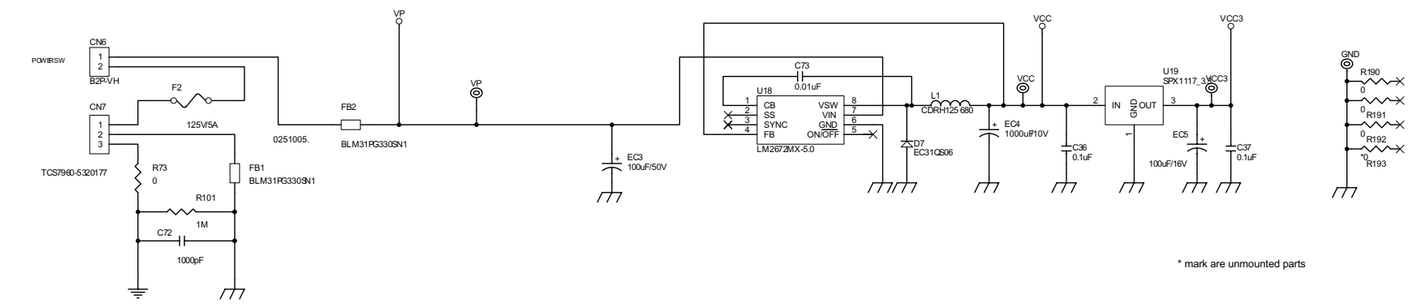

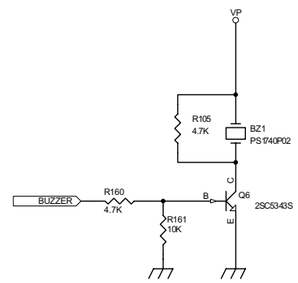

* mark are unmounted parts

CASIO COMPUTER CO.,LTD.	Model	PWB No.	PWB Name
	UP-370	EBL-0950D-1	Main Board Circuit (3/3)

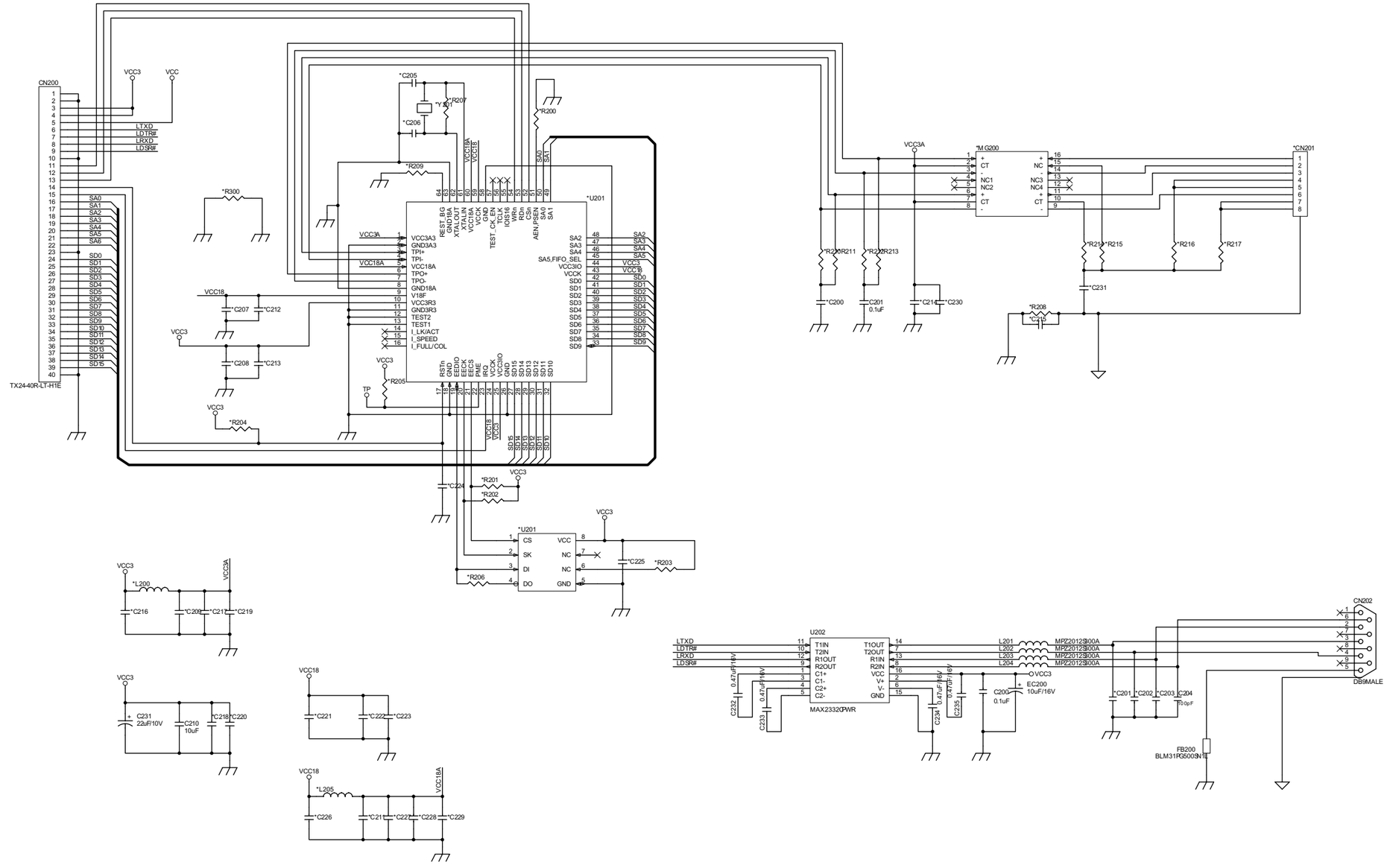

* marks are unmounted parts.

CASIO COMPUTER CO.,LTD.	Model	PWB No.	PWB Name
	UP-370	EAL-0951B	Sub Board Circuit

7. PARTS LIST

PARTS LIST

MODEL : UP-370

CONTENTS

EXPLODED VIEW.....19

1. MAIN BOARD UNIT 20
2. CONTROL PANEL 20
3. I/F PWB UNIT 20
4. POWER SW ASSY 20
5. NEAR END SENSOR UNIT 20
6. CASE UNIT 20

NOTES :

1. Price and specifications are subject to change withput prior notice.
2. As for spare parts order and supply, refer to the “GUIDEBOOK for Spare Parts Supply”, published separately.
3. The numbers in item column corespond to the same numbers in drawing.
4. CASIO does not supply the spare parts without parts code.
5. Remarks

   Q'ty : Quantity used per unit
   RANK: A = Essential
   B = Stock recommended
   C = Less recommended
   X = No stock recommended

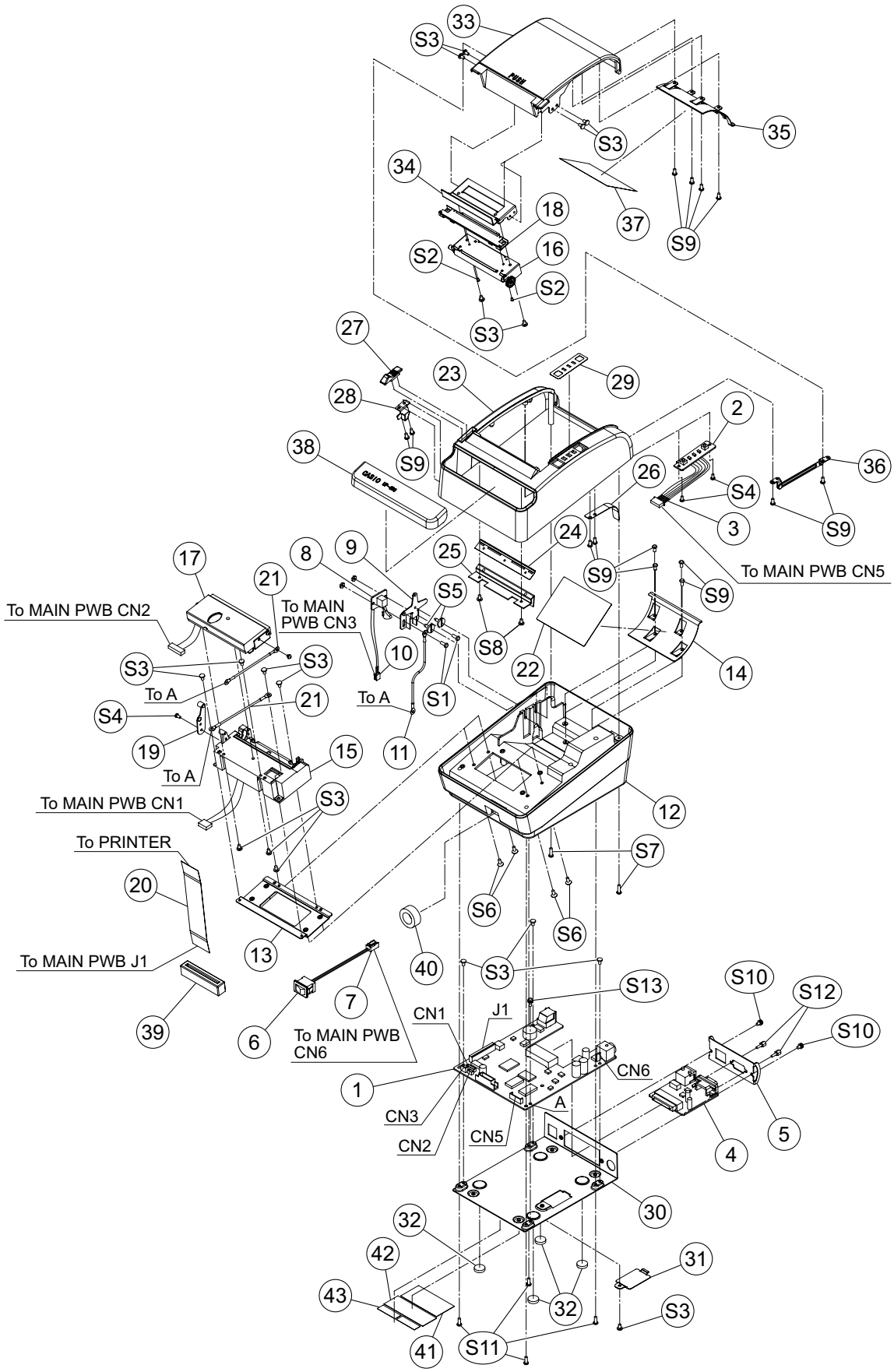

33
S3
35
S3
34
18
37
S9
16
S2
S2
S3
27
23
29
28
2
38
S9
26
36
S4
3
S9
24
17
8
9
25
S9
To MAIN PWB CN5
21
S5
S9
To MAIN PWB CN2
To MAIN PWB CN3
S8
10
22
14
S3
S3
To A
21
To A
S1
S4
19
15
11
To A
12
To MAIN PWB CN1
S3
To PRINTER
S7
20
S6
S6
13
40
S3
To MAIN PWB J1
S13
S10
S12
7
CN1
J1
S10
39
6
To MAIN PWB CN6
CN6
1
A
CN3
CN5
5
CN2
4
30
32
42
31
43
32
S3
41
S11

N	Item	Code No.	Parts Name	Specification	Q'ty	Price Code	Rank
	1. MAIN BOARD UNIT						
	1	10336681	PWB/MAIN	00-010667-02	1	EE	A
	2. CONTROL PANEL UNIT						
	2	10328146	ASSY/CONTROL PANEL	20-080050-05	1	BA	A
	3		ASSY/HARNESS	03-47411126LF	1		
	3. I/F PWB UNIT						
	4	10336682	PWB/IF	00-010669-02	1	CP	A
	5		PLATE/IF	03-45430600LF	1		
	4. POWER SW ASSY						
	6	10328148	ASSY/POWER SW	20-090008-13	1	AX	A
	7		ASSY/HARNESS	03-47421014LF	1		
	5. NEAR END SENSOR UNIT						
	8	10328149	NEAR END SENSOR UNIT	20-120056-03	1	BL	A
	9		PLATE/NE	03-10101370LF	1		
	10		ASSY/HARNESS	03-47405350LF	1		
	11		ASSY/HARNESS	03-47410900LF	1		
			NUT	03-55200010LF	2		
	6. CASE UNIT						
	12	10328951	CASE/BOTTOM	03-24490300BLF	1	BQ	C
	13		CHASSIS/PRINTER	03-42100060BLF	1		
	14		PLATE/SUPPORT	03-41501400CLF	1		
	15,16	10328151	PRINTER	00-24791155LF	1	DS	A
	17,18	10328157	AUTO CUTTER	00-24791270LF	1	DD	A
	19		LEVER	03-45300870LF	1		
	20	10328158	F.F.C	00-62200555LF	1	AR	C
	21		ASSY/HARNESS	03-47410550LF	2		
	22		SHEET/PVC	03-13170200BLF	1		
	23	10328152	CASE/TOP	03-24190898BLF	1	BB	C
	24	10328153	PAPER CUTTER	01-24301030LF	1	AE	A
	25	10328154	PAPER GUIDE	03-46001130CLF	1	AO	C
	26		SPRING	03-10400410BLF	1		
	27	10328155	KNOB	03-10602129LF	1	AC	C
	28		HOOK ARM	03-41502450CLF	1		
	29		LABEL/CONTROL SW	00-31113740LF	1		
	30		PLATE/BOTTOM	03-10170500LF	1		
	31		COVER/DIP SW	03-24290500LF	1		
	32		RUBBER/FOOT	03-25800870LF	4		
	33	10328156	COVER/PRINTER	03-24281219LLF	1	AY	C
	34	10328159	SET PIECE'(PLATEN)	03-46505300BLF	1	AV	C
	35		PLATE/UP	03-10105570DLF	1		
	36		ASSY/STOPPER	03-49000200LF	1		
	37		LABEL/RP SETTING	03-31110806LF	1		
	38		CASE/SUB TOP	03-24190901BLF*	1		
	39		FERRITE CORE	00-21001100LF	1		
	40		CORE	02-40300521LF	1		
	41		LABEL/FCC	03-31104520LF	1		
	42		LABEL/RATING	03-32170700LF	1		
	43		LABEL	03-31100997LF	2		

N	Item	Code No.	Parts Name	Specification	Q'ty	Price Code	Rank
	S1		SCREW	03-55100128LF	2		
	S2		SCREW	03-55100010LF	2		
	S3		SCREW	03-55191250LF	17		
	S4		SCREW	03-55190710LF	3		
	S5		SCREW	03-55101260BLF	2		
	S6		SCREW	03-55104020LF	4		
	S7		SCREW	03-55100440LF	2		
	S8		SCREW	03-55180045LF	2		
	S9		SCREW	03-55100420LF	14		
	S10		SCREW	03-55100121LF	2		
	S11		SCREW	03-55100430LF	4		
	S12		SCREW		2		
	S13		SCREW	03-55100150LF	1		
		10328160	ADAPTOR	02-22620150LF	1	DK	A

CASIO COMPUTER CO.,LTD.

Overseas Service Division

6-2, Hon-machi 1-Chome
Shibuya-ku, Tokyo 151-8543, Japan